WAGOframe

FDT frame application for parameterization, commissioning and diagnostics of devices with DTM device driver

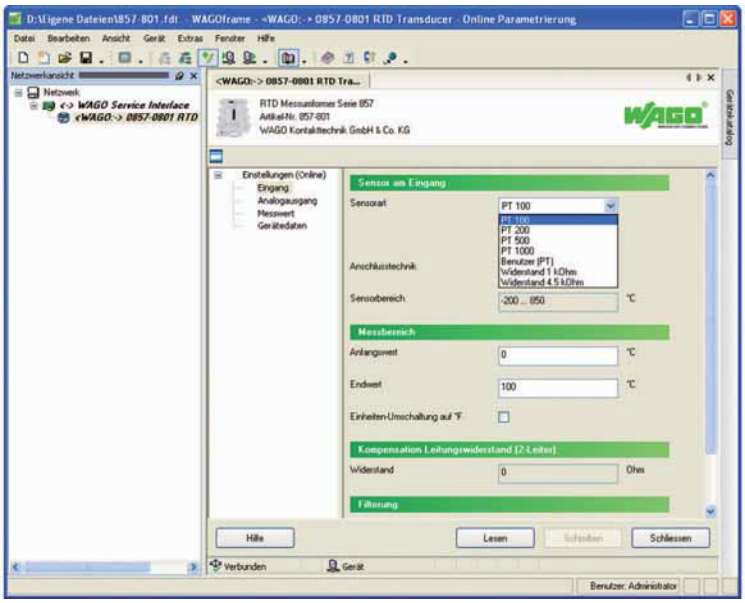

WAGOframe: Parameterizing a *JUMPLEX*® transducer

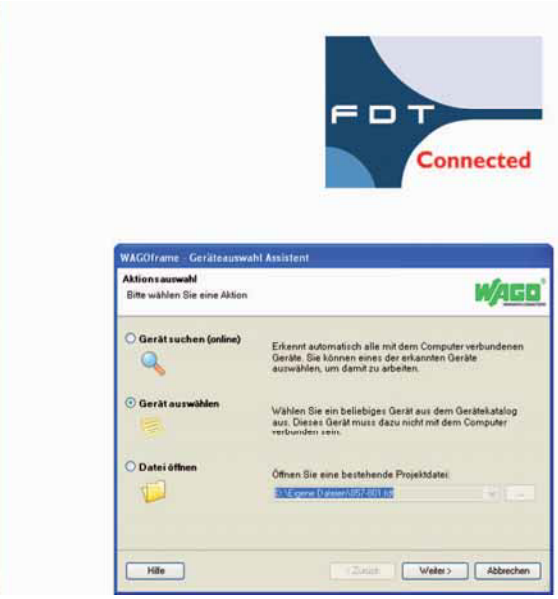

WAGOframe: Wizard function

WAGOframe is an FDT/DTM-based software used for parameterization, commissioning and diagnostics of field devices.
DTM device drivers for the devices employed are required to use the WAGOframe FDT frame application.
The WAGOframe FDT frame application provides a wizard, which simplifies the operation of components, such as WAGO JUMPFLEX DTMs. For example, this wizard guides the user through the different operating modes of DTM device drivers.
Depending on the PC communication interface used, an appropriate communication cable including DTM is required.

Description	Item No.	Pack. Unit
WAGOframe	**759-370**	1

Accessories	Item No.	Pack. Unit
857 Series *JUMPFLEX* configuration		
WAGO USB Communication Cable	**750-923**	1
767 Series SPEEDWAY configuration		
USB communication cable	**756-4101/042-030**	1

Technical Data	
System requirements:	
Operating system	Windows XP (SP3 or later), Windows 7
Processor	1 GHz or higher, with 32 bits (x86) or 64 bits (x64)
RAM memory	min. 1 GB RAM (recommended: 2 GB RAM or more)
Hard disk storage	min. 300 Mbytes
CD-ROM	required
Graphics resolution	min. 1024 x 786 (recommended: 1280 x 1024 or higher)
Mouse	required
Other	Free interface in PC for communication with the device (e.g., USB, Serial, ETHERNET, ...)
Included:	CD ROM with software and documentation
Additional requirements:	Cable between PC communication interface and device. DTM software for the communication interface used in the PC. DTM software of the device.

Windows® is a registered trademark of Microsoft Corporation

CoDeSys V3

Development system for programming and visualization according to IEC61131-3

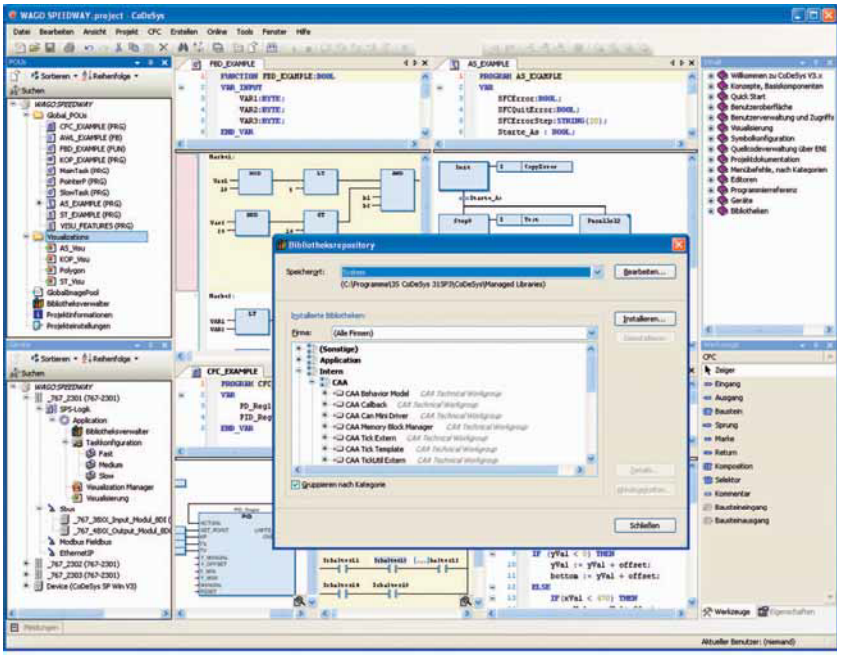

CoDeSys is a programming and visualization tool for PLC programs. With CoDeSys Version 3, users can develop PLC applications for the Programmable Fieldbus Controller found in the WAGO SPEEDWAY 767 Series. CoDeSys 3 works in accordance with IEC 61131-3 and supports IL, LD, FBD, ST and FC, all of which are programming languages for this standard. With extensive programming functions, the software readily meets the in creasing requirements of control program development; e.g., reusability or modularization.

- Programming of different control systems in one application
- Cross communication between control systems
- Object-oriented extension of the IEC61131-3
- Integrated process visualization
- Additional high-performance CFC editor

Description	Item No.	Pack. Unit
CoDeSys V3	**759-915**	1

Technical Data	
System requirements:	
Operating system	Windows XP (SP3 or later), Windows 7
Processor	1 GHz or higher, with 32 bits (x86) or 64 bits (x64)
RAM memory	min. 1 GB RAM (recommended: 2 GB RAM or more)
Hard disk storage	min. 800 Mbytes
CD-ROM	required
Graphics resolution	min. 1024 x 786 (recommended: 1280 x 1024 or higher)
Mouse	Required
Other	Free USB interface in PC for communication with the controller
Included:	CD-ROM with software and documentation
Additional requirements:	USB communication cable (item no. 756-4101/0042-0030) for communication between PC and device.

Windows® is a registered trademark of Microsoft Corporation

PLC - PROFIBUS DP/V1 Programmable Fieldbus Controller

16-bit CPU

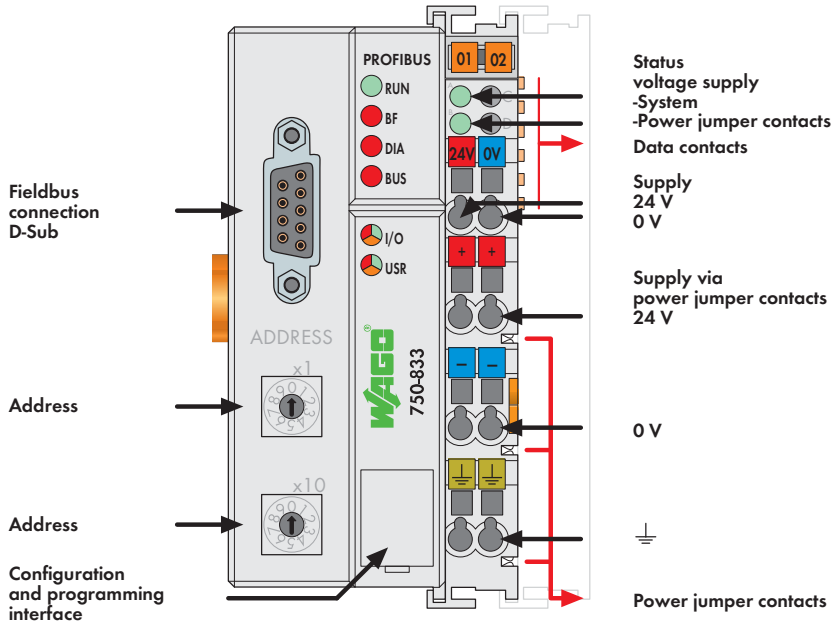

The PROFIBUS DP/V1 PLC combines control functionality, I/O interface and fieldbus in one device. Programming PLC applications is performed in compliance with IEC 61131-3. The programmer can access all fieldbus and I/O data.

Features and applications:

- Use of decentralized control can better support a PLC or PC
- Complex applications can be divided into individually testable units
- Programmable fault response in the event of a fieldbus failure
- Signal pre-processing reduces fieldbus transmissions
- Peripheral equipment can be controlled directly, resulting in faster system response times
- Stand-alone, compact controller

Notice: GSD files required

Description	Item No.	Pack. Unit
Contr. PROFIBUS DP/V1 12 MBd	**750-833**	1
PROFIBUS DP/V1 Controller/T	**750-833/025-000**	1
Extended operating temperature range: -20 °C ... +60 °C		

Accessories		Item No.	Pack. Unit
GSD files	Download: www.wago.com		
WAGO-I/O-PRO V2.3, RS-232 kit		**759-333**	1
Miniature WSB Quick marking system			
	plain	**248-501**	5
	with marking	see pages 352 ... 353	

Standards and Approvals	Also see "Approvals Overview" in Section 1
Standard	EN 50170
Conformity marking	CE
Shipbuilding (versions upon request)	ABS, BV, DNV, GL, KR, LR, NKK, PRS, RINA
cULus UL 508	
cULus ANSI/ISA 12.12.01	Class I, Div. 2, Grp. ABCD, T4
Ex IEC 60079-0, -15	BR-Ex nA II T4
Ex EN 60079-0, -15	I M2 / II 3 GD Ex nA nL IIC T4
EN 61241-0, -1	

System Data	
No. of controllers connected to Master	96 with repeater
Max. no. of I/O points	approx. 6000 (depends on master)
Transmission medium	Cu cable acc. to EN 50170
Max. length of fieldbus segment	100 m ... 1200 m (depends on baud rate/cable)
Baud rate	9.6 Kbaud ... 12 Mbaud
Transmission time	typ. 1 ms (10 controller; 32 digital I/Os per controller at 12 Mbaud) max. 3.3 ms
Buscoupler connection	1 x D-Sub 9; socket
Programming	WAGO-I/O-PRO 32 (as of firmware SW 07 also programmable with WAGO-I/O-PRO V2.3)
IEC 61131-3	IL, LD, FBD, ST, FC