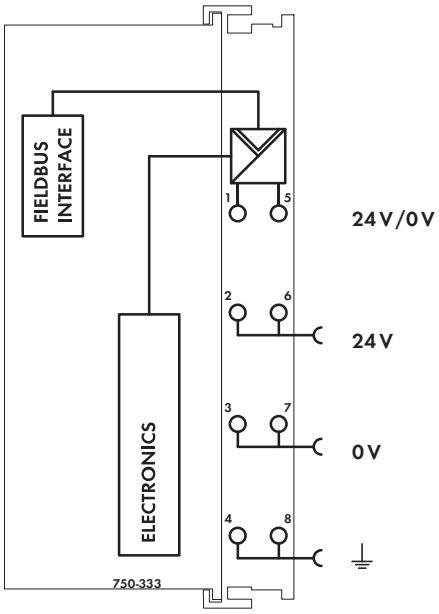

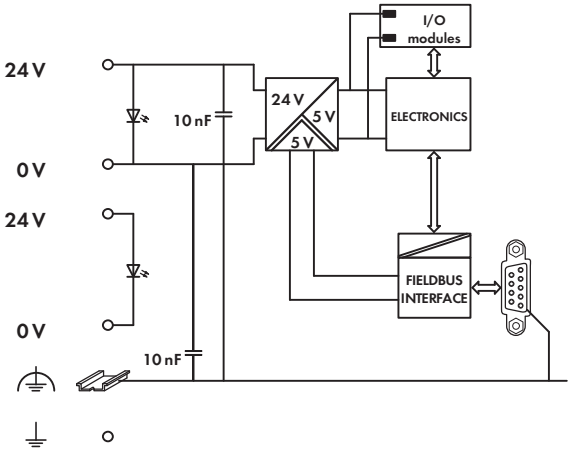

Technical Data

Number of I/O modules	63
Fieldbus	
Max. input process image	244 bytes
Max. output process image	244 bytes
Configuration	via PC or PLC
Power supply	24 V DC (-25 % ... +30 %)
Max. input current (24 V)	500 mA
Efficiency of the power supply	87 %
Internal current consumption (5 V)	200 mA
Total current for I/O modules (5 V)	1800 mA
Isolation	500 V system/supply
Voltage via power jumper contacts	24 V DC (-25 % ... +30 %)
Current via power jumper contacts (max.)	10 A DC

General Specifications

Operating temperature	0 °C ... +55 °C
	-20 °C ... +60 °C
Wire connection	CAGE CLAMP®
Cross sections	0.08 mm² ... 2.5 mm² / AWG 28 ... 14
Stripped lengths	8 ... 9 mm / 0.33 in
Dimensions (mm) W x H x L	51 x 65 x 100
	Height from upper-edge of DIN 35 rail
Weight	190 g
Storage temperature	-25 °C ... +85 °C
Relative air humidity (no condensation)	95 %
Vibration resistance	acc. to IEC 60068-2-6
Shock resistance	acc. to IEC 60068-2-27
Degree of protection	IP20
EMC: CE - immunity to interference	acc. to EN 61000-6-2 (2005)
EMC: CE - emission of interference	acc. to EN 61000-6-4 (2007)
EMC: marine applications	
- immunity to interference	acc. to Germanischer Lloyd (2003)
EMC: marine applications	
- emission of interference	acc. to Germanischer Lloyd (2003)

PROFIBUS DP/V1 Fieldbus Coupler

12 Mbaud; digital and analog signals

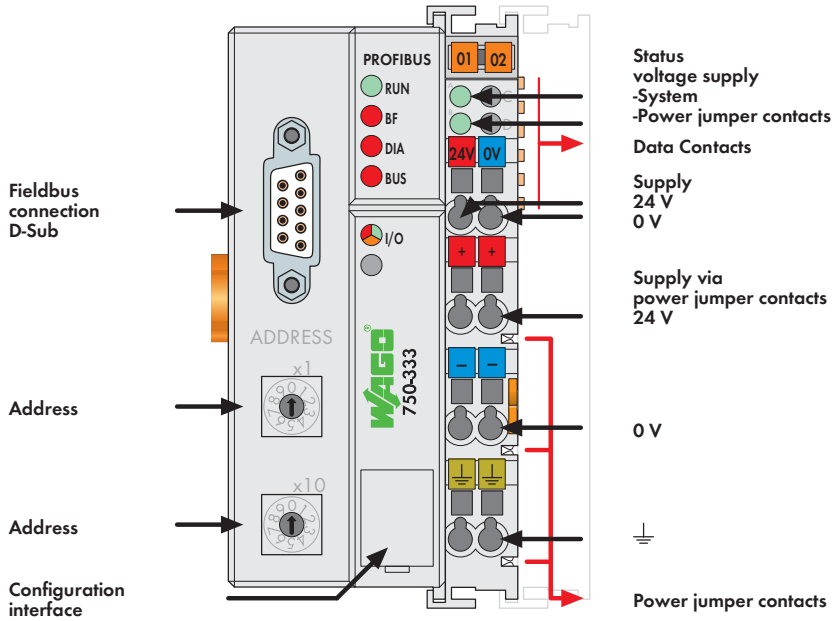

This buscoupler interfaces the I/O modules of the WAGO-I/O-SYSTEM to PROFIBUS DP.

When initializing, the buscoupler determines the module structure of the node, to create the process image in PROFIBUS. In order to optimize addresses, the I/O modules with a bit width smaller than 8 are grouped in one byte.

It is furthermore possible to deactive I/O modules and to modify the image of the node according to the connected signals without having to modify the existing application.

The diagnosis concept is based on diagnostics according to the EN 50170 standard. Therefore the programming of modules is not necessary to interpret the diagnostic information from each manufacturer.

Notice: GSD files required

Description	Item No.	Pack. Unit
PROFIBUS DP/V1 12MBd	**750-333**	1
PROFIBUS DP/V1/T	**750-333/025-000**	1
Extended operating temperature range: -20 °C ... +60 °C		

Accessories		Item No.	Pack. Unit
GSD files	Download: www.wago.com		
Miniature WSB Quick marking system			
	plain	**248-501**	5
	with marking	see pages 352 ... 353	

Standards and Approvals	Also see "Approvals Overview" in Section 1	
Standard	EN 50170	
Conformity marking	CE	
Shipbuilding (versions upon request)	ABS, BV, DNV, GL, KR, LR, NKK, PRS, RINA	
UL 508		
ANSI/ISA 12.12.01	Class I, Div. 2, Grp. ABCD, T4	750-333
IEC 60079-0, -15	BR-Ex nA II T4	750-333
EN 60079-0, -11, -15	I M2 Ex d I	750-333*
EN 61241-0, -1, -11	II 3 G Ex nA nL IIC T4	750-333*
	II 3 D Ex tD A22 IP6X T135°C	750-333*
	* Permissible operating temperature: 0°C ... +60°C	

System Data	
No. of couplers connected to Master	96 with repeater
Max. no. of I/O points	approx. 6000 (depends on master)
Transmission medium	Cu cable acc. to EN 50170
Max. length of fieldbus segment	100 m ... 1200 m (depends on baud rate/ cable)
Baud rate	9.6 Kbaud ... 12 Mbaud
Transmission time	typ. 1 ms (10 couplers; 32 digital I/Os per coupler at 12 Mbaud) max. 3.3 ms
Buscoupler connection	1 x D-Sub 9; socket