Ground blocks with screw connection

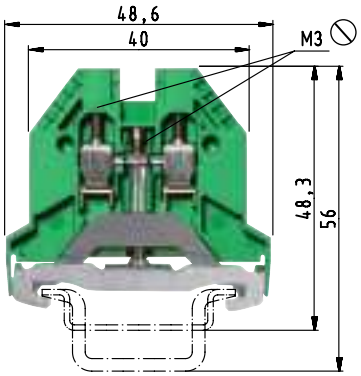

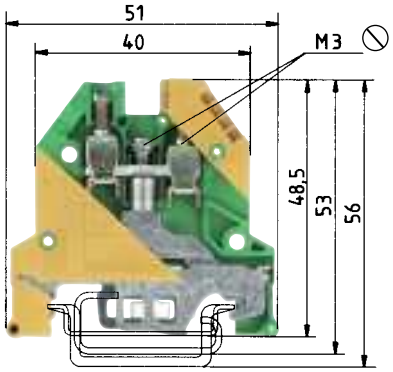

Enclosed design

	WK 2,5 SL/35			WK 4 SL/U		
0344 Ex II 2GD IM2						
Ex e I/II	fine-stranded	solid	V A	fine-stranded	solid	V A
EN 60947-7-2	0.5-2.5 mm²	0,5-4 mm²	500 V/6 kV/3[3]	0.5-4 mm²	0.5-6 mm²	800 V/8 kV/3[3]
UL ratings / Field/factory wiring	No. 22-12 AWG			No. 22-10 AWG		
CSA ratings	No. 24-12 AWG			No. 20-10 AWG		
KEMA 02 ATEX 2114 U[1] EN 60079-0/EN 60079-7				0.5-4 mm²	0.5-6 mm²	
Width / Wire strip length	5 mm		9 mm	6 mm		9 mm
Approvals	SEV, UL, CSA			EPM, SEV, NV, ATEX, CEBEC, LR, UL, UL AEx, CSA, CSA Ex		

		Type	Part No.	Std. Pack	Type	Part No.	Std. Pack
Ground block	green/yellow	WK 2,5 SL/35	56.503.9055.0	100	WK 4 SL/U	57.504.9055.0	100
Accessories							
1. Mounting rail TS 35, DIN rail 7.5 mm high	L = 2 m	35 x 27 x 7,5 EN 60715	98.300.0000.0	1	35 x 27 x 7,5 EN 60715	98.300.0000.0	1
Mounting rail TS 35, DIN rail, 15 mm high	L = 2 m	35 x 27 x 15 EN 60715	98.370.0000.0	1	35 x 27 x 15 EN 60715	98.370.0000.0	1
Mounting rail TS 32, G rail[2]	L = 2 m				9006 EN 60715 G-32	98.190.0000.0	1
2. End clamp with U-foot[2]	10 mm wide	WE 1/U	Z5.523.5753.0	100	WE 1/U	Z5.523.5753.0	100
End clamp TS 35, with screw	8 mm wide	9708/2 S35	Z5.522.8553.0	100	9708/2 S35	Z5.522.8553.0	100
End clamp TS 35, without screw	8 mm wide	WEF 1/35	Z5.523.9353.0	100	WEF 1/35	Z5.523.9353.0	100
3. End plate	gray						
	green	AP 2,5-4 SL	07.311.7155.0	10			
4. Partition	gray						
5. Cross connector with screws	2 pole						
insulated	3 pole						
	up to 12 pole						
6. Partition plate with marking facility							
7. Single cover with marking facility							
8. Cover with warning symbol over 4 blocks							

For more accessories see pages 62-79
For marking systems see pages 72-77

[1] Please note the mounting instructions.
[2] Do not use in Ex environments.
[3] Ratings to adjacent feed-through blocks of the same series and size.

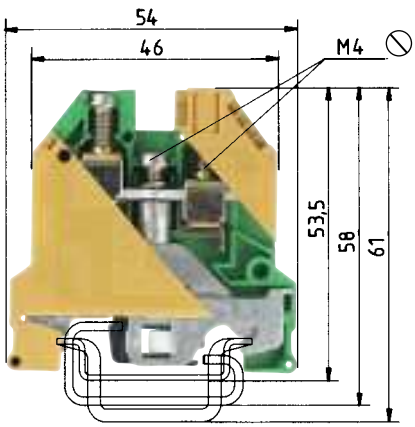

Enclosed design

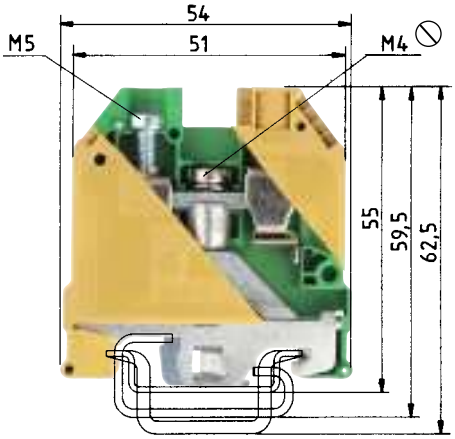

Enclosed design

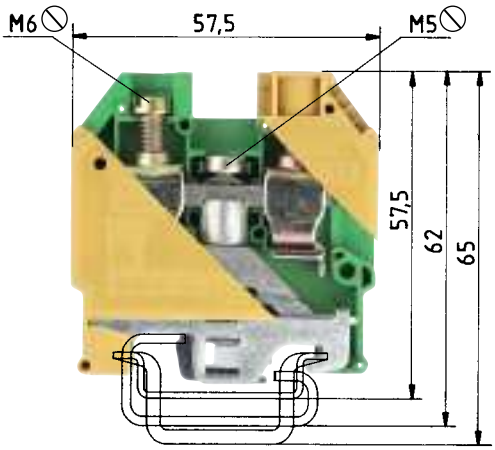

Enclosed design

WK 6 SL/U

fine-stranded solid V A
0.5-6 mm² 0.5-0 mm² 800 V/8 kV/3[3)]
No. 22-8 AWG
No. 20-8 AWG
0.5-6 mm² 0.5-10 mm²
8 mm 12 mm
EPM SEV NV ATEX LR UL UL AEx CSA CSA Ex

WKN 10 SL/U

fine-stranded solid/stranded V A
2.5-10 mm² 1.5-16 mm² 800 V/8 kV/3[3)]
No. 16-6 AWG
No. 16-6 AWG
2.5-10 mm² 1.5-16 mm²
10 mm 13 mm
EPM SEV NV ATEX LR UL UL AEx CSA CSA Ex

WKN 16 SL/U

fine-stranded solid/stranded V A
4-16 mm² 1.5-25 mm² 800 V/8 kV/3[3)]
No. 12-4 AWG
No. 14-4 AWG
4-16 mm² 1.5-25 mm²
12 mm 15 mm
EPM SEV NV ATEX LR UL UL AEx CSA CSA Ex

Type	Part No.	Std. Pack	Type	Part No.	Std. Pack	Type	Part No.	Std. Pack
WK 6 SL/U	57.506.9055.0	100	WKN 10 SL/U	57.510.9055.0	50	WKN 16 SL/U	57.516.9055.0	50
35 x 27 x 7,5 EN 60715	98.300.0000.0	1	35 x 27 x 7,5 EN 60715	98.300.0000.0	1	35 x 27 x 7,5 EN 60715	98.300.0000.0	1
35 x 27 x 15 EN 60715	98.370.0000.0	1	35 x 27 x 15 EN 60715	98.370.0000.0	1	35 x 27 x 15 EN 60715	98.370.0000.0	1
9006 EN 60715 G-32	98.190.0000.0	1	9006 EN 60715 G-32	98.190.0000.0	1	9006 EN 60715 G-32	98.190.0000.0	1
WE 1/U	Z5.523.5753.0	100	WE 1/U	Z5.523.5753.0	100	WE 1/U	Z5.523.5753.0	100
9708/2 S35	Z5.522.8553.0	100	9708/2 S35	Z5.522.8553.0	100	9708/2 S35	Z5.522.8553.0	100
WEF 1/35	Z5.523.9353.0	100	WEF 1/35	Z5.523.9353.0	100	WEF 1/35	Z5.523.9353.0	100