Base strip - MSTBVA 2,5/ 6-G-5,08 - 1755778

Please be informed that the data shown in this PDF Document is generated from our Online Catalog. Please find the complete data in the user's documentation. Our General Terms of Use for Downloads are valid
(http://download.phoenixcontact.com)

The figure shows a 10-position version of the product

Header, Nominal current: 12 A, Rated voltage (III/2): 320 V, Number of positions: 6, Pitch: 5.08 mm, Color: green, Contact surface: Tin, Assembly: Soldering

Product Features

- Other pin lengths available on request
- Versions with and without side panel
- Plug-in direction parallel and vertical to the PCB
- Standard pin strip for 320 V (III/2)

Key commercial data

package_quantity	100
GTIN	4017918029357

Technical data

Dimensions

Length	8.6 mm
Pitch	5.08 mm
Dimension a	25.4 mm
Pin dimensions	1 x 1 mm
Hole diameter	1.4 mm

General

Range of articles	MSTBVA 2,5/..-G
Insulating material group	I
Rated surge voltage (III/3)	4 kV
Rated surge voltage (III/2)	4 kV
Rated surge voltage (II/2)	4 kV
Rated voltage (III/3)	250 V
Rated voltage (III/2)	320 V
Rated voltage (II/2)	630 V
Connection in acc. with standard	EN-VDE
Nominal current I_N	12 A
Maximum load current	12 A
Insulating material	PA

Base strip - MSTBVA 2,5/ 6-G-5,08 - 1755778

Technical data

General

Inflammability class according to UL 94	V0
Color	green
Number of positions	6

classifications

eCl@ss

eCl@ss 4.0	272607xx
eCl@ss 4.1	27260701
eCl@ss 5.0	27260701
eCl@ss 5.1	27260701
eCl@ss 6.0	27260704
eCl@ss 7.0	27440402
eCl@ss 8.0	27440402

ETIM

ETIM 3.0	EC001121
ETIM 4.0	EC002637
ETIM 5.0	EC002637

UNSPSC

UNSPSC 6.01	30211810
UNSPSC 7.0901	39121409
UNSPSC 11	39121409
UNSPSC 12.01	39121409
UNSPSC 13.2	39121409

approvals

CSA / UL Recognized / VDE Gutachten mit Fertigungsüberwachung / cUL Recognized / GOST / IECEE CB Scheme / GOST / CCA / cULus Recognized /

Approval details

CSA

Usegroups	**B**	**D**
Nominal voltage UN	300 V	300 V
Nominal current IN	12 A	10 A
mm²/AWG/kcmil		

Base strip - MSTBVA 2,5/ 6-G-5,08 - 1755778

approvals

UL Recognized

Usegroups	B	D
Nominal voltage UN	300 V	300 V
Nominal current IN	12 A	10 A
mm²/AWG/kcmil		

VDE Gutachten mit Fertigungsüberwachung

Nominal voltage UN	250 V
Nominal current IN	12 A
mm²/AWG/kcmil	

cUL Recognized

Usegroups	B	D
Nominal voltage UN	300 V	300 V
Nominal current IN	12 A	10 A
mm²/AWG/kcmil		

GOST

IECEE CB Scheme

Nominal voltage UN	250 V
Nominal current IN	12 A
mm²/AWG/kcmil	

CCA

Nominal voltage UN	250 V

Base strip - MSTBVA 2,5/ 6-G-5,08 - 1755778

approvals

Nominal current IN	12 A
mm²/AWG/kcmil	

cULus Recognized

accessories

Filler plug

MSTB-BL - 1755477

Labeled terminal marker

SK 5,08/3,8:FORTL.ZAHLEN - 0804293

Coding element

CR-MSTB - 1734401

Drawings

Base strip - MSTBVA 2,5/ 6-G-5,08 - 1755778

Drilling diagram

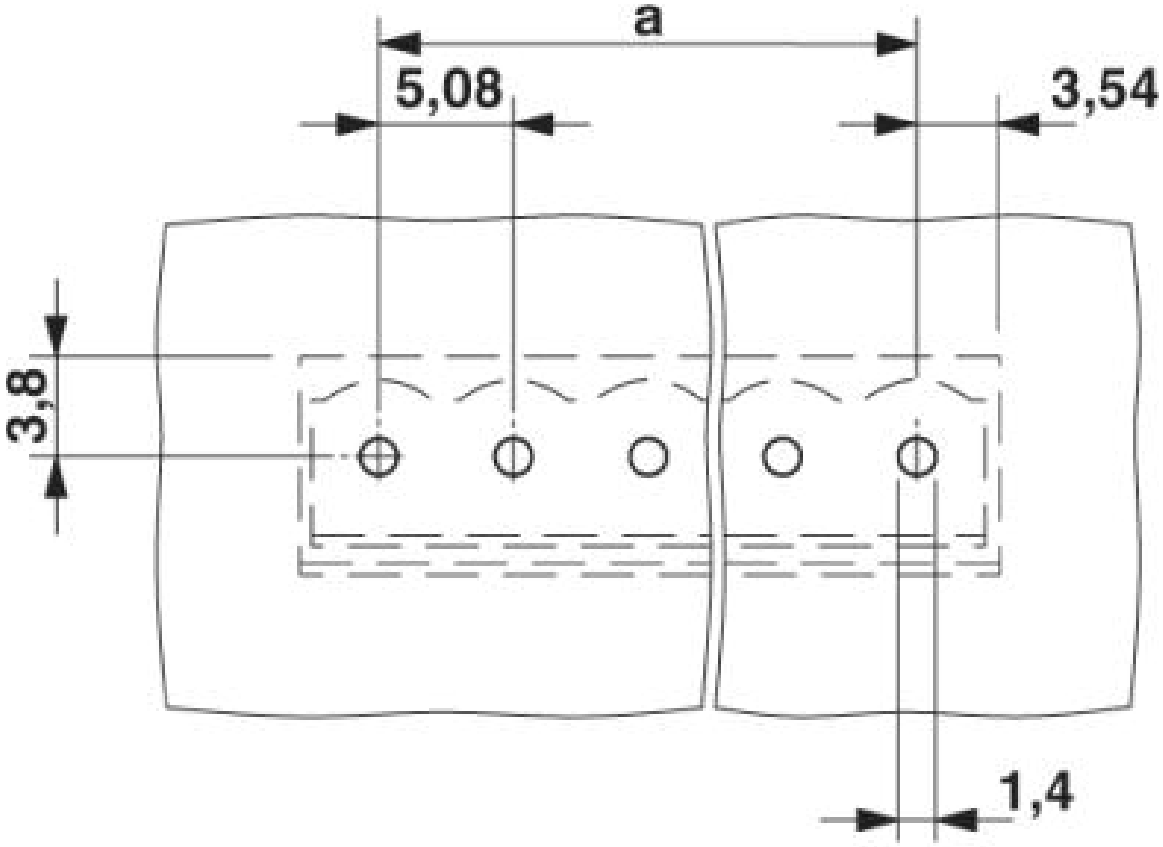

Base strip - MSTBVA 2,5/ 6-G-5,08 - 1755778

Diagram

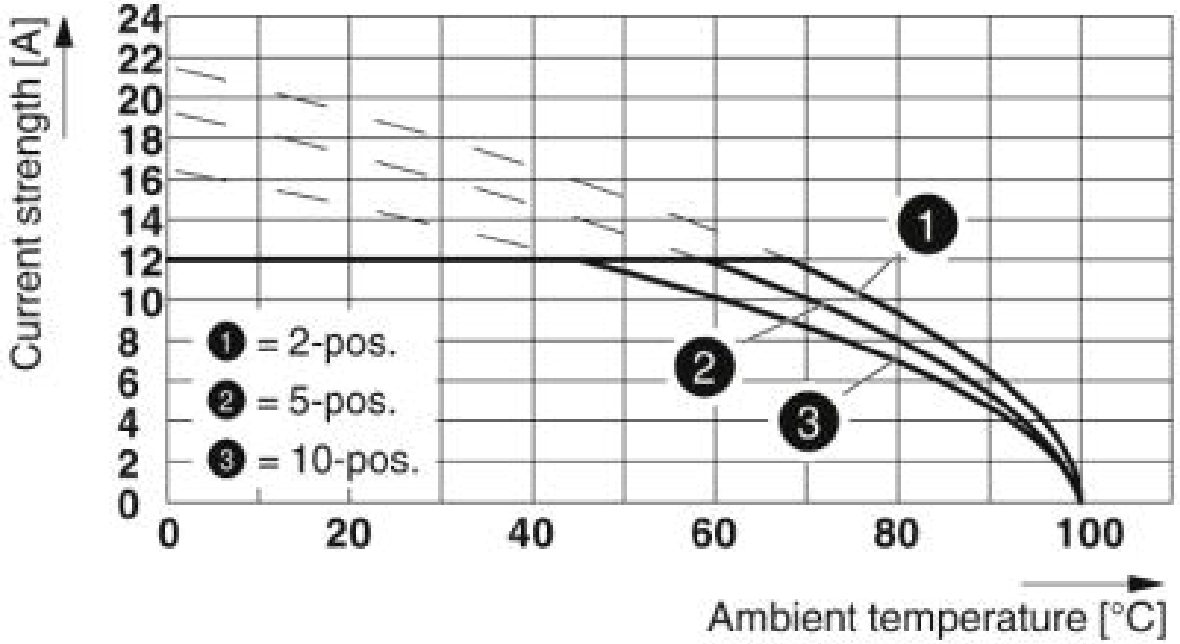

Type: TFKC 2,5/...-ST-5,08 with MSTBVA 2,5/...-G-5,08

Dimensioned drawing

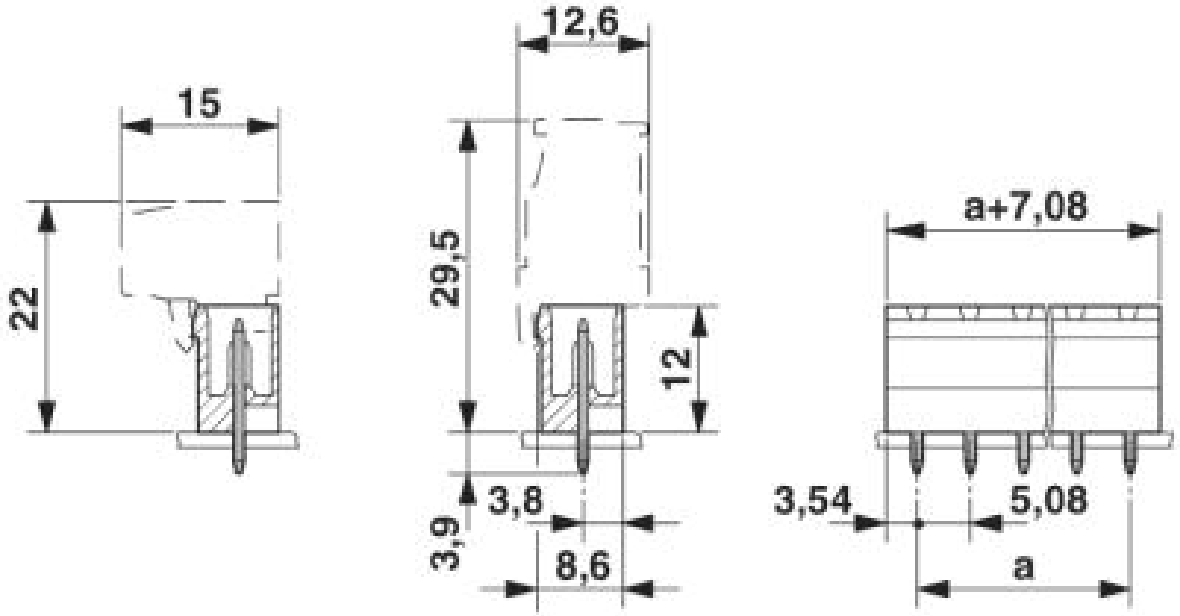

© Phoenix Contact 2014 - all rights reserved
http://www.phoenixcontact.com